DC/DC CONVERTER
ELECTRICAL CHARACTERISTICS

TYPE NO: SD11107

T#	TEST METHOD	SYMBOL	CONDITIONS	MIN.	MAX	UNITS
1						
2		VOUT 1	Vin= 4.5V +/-0.1V Io=1.65A	3.135	3.465	Volts
3		VOUT 2	Vin= 4.5V +/-0.1V Io=15.0A	3.135	3.465	Volts
4		VOUT 3	Vin= 5.5V +/-0.1V Io=1.65A	3.135	3.465	Volts
5		VOUT 4	Vin= 5.5V +/- 0.1V Io=15.0A	3.135	3.465	Volts
6						
7						
8		V(Ripple)	Vin= 4.5V Io = 15A		35	MVrms
9		F(Ripple)	Vin= 4.5 V Io = 15A	240	300	KHZ
10						
11		Z (comp)	V= 0 VDC 0.1 +/-0.1Vrms	180	220	Ohms
12			F= 1 MHZ +/- 0.1MHZ	-85	-80	Degree
13						
14						
15						
16		PACKAGE OUTLINE DRAWING NO. DR13182				
17						
18						
19						
20						
21						
22						
23						
24						
25						

PIN-OUT

1. VIN	8. ANALOG GROUND
2. VIN	9. VIN RTN
3. VIN	10. VIN RTN
4. CHASIS GROUND	11. VIN RTN
5. VIN	12. VOUT (SW)
6. V SENSE +	13. VOUT (SW)
7. COMP.	14. VOUT (SW)

3301 Electronics Way, West Palm Beach, Florida 33407-4697
Tel: (561) 848-4311 Fax: (561) 863-5946

DC/DC CONVERTER

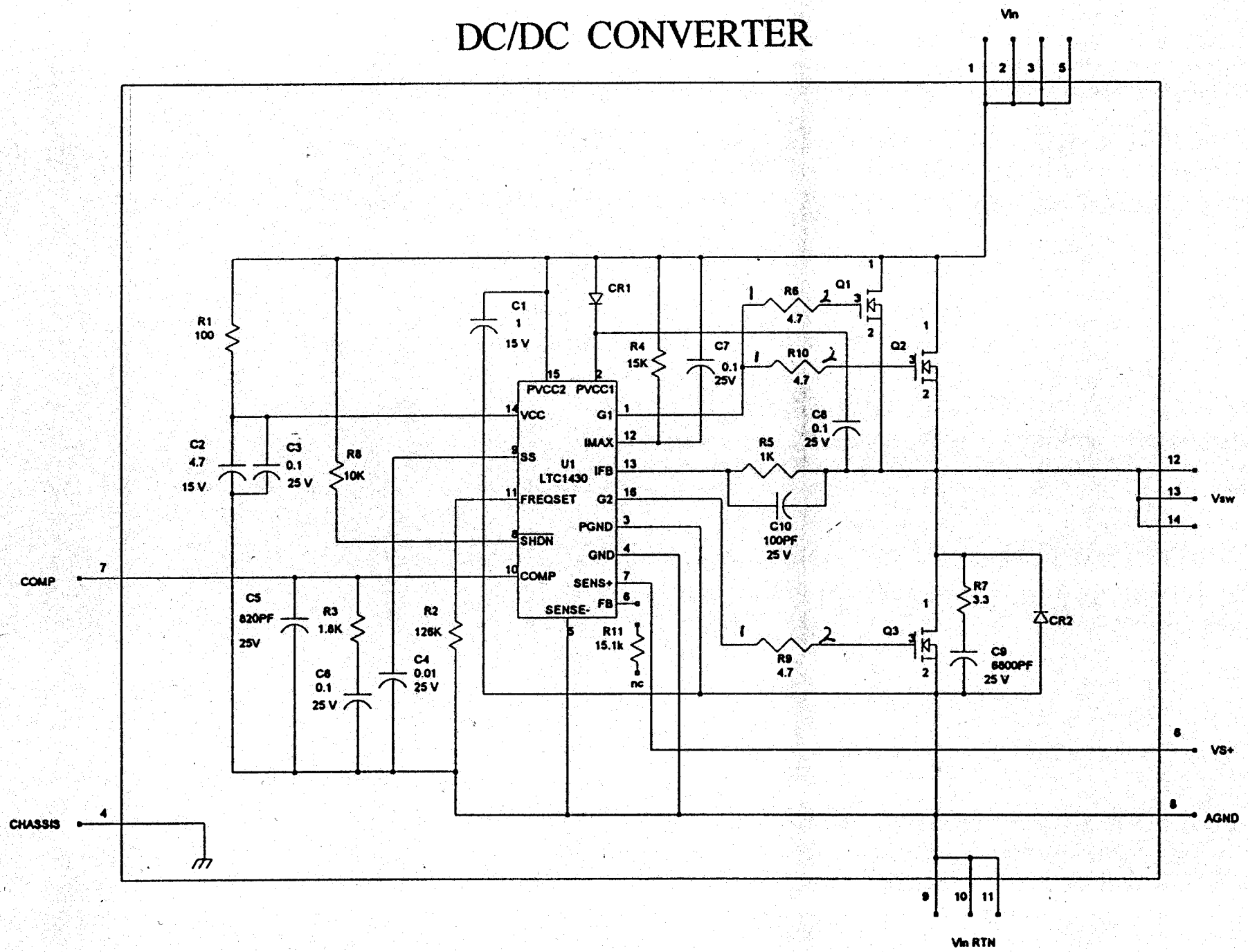

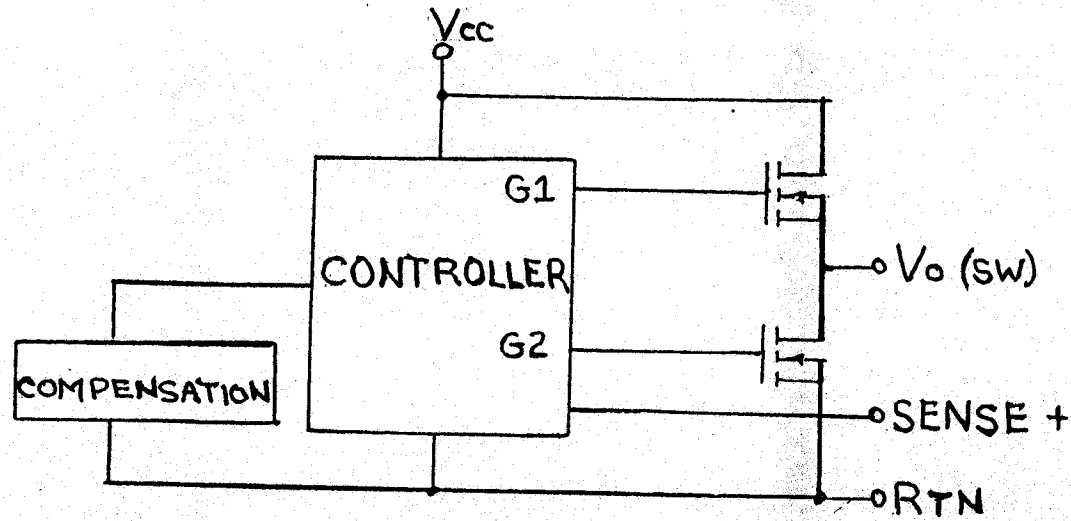
Vcc
G1
CONTROLLER
G2
COMPENSATION
Vo (SW)
SENSE +
RTN

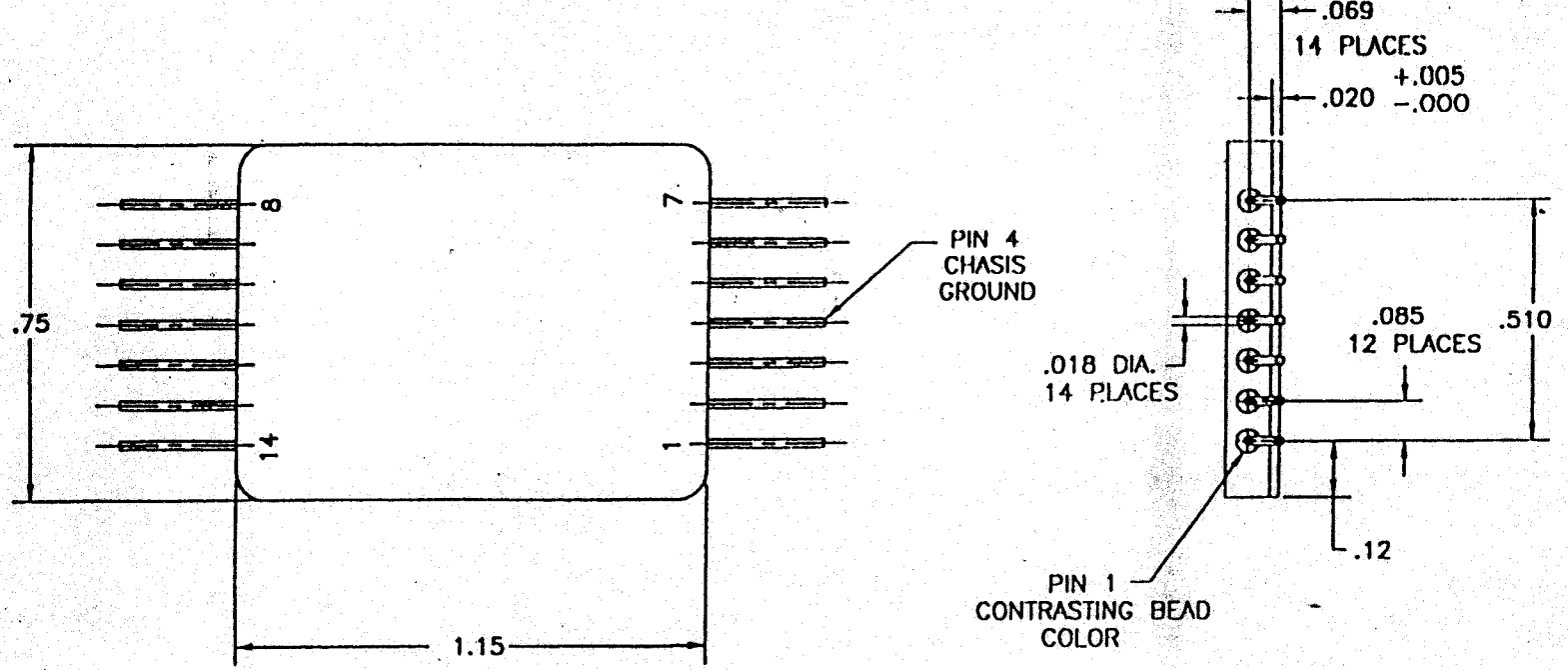

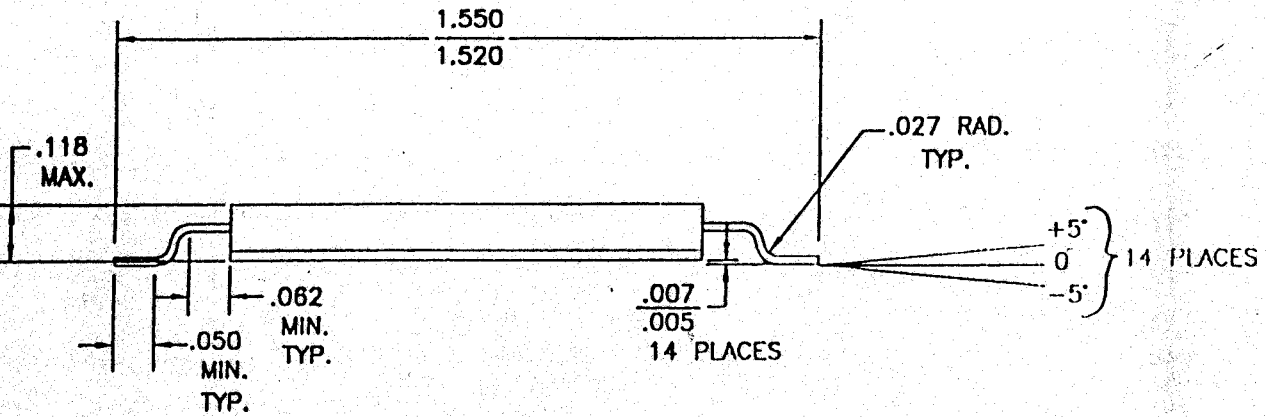

NOTES:

1. CENTER LINE DIMENSIONS BETWEEN ADJACENT LEADS APPLY ONLY AT LEAD TO CASE INTERFACE.
2. CASE MATERIAL:
   BASE GLIDCOP
   FRAME COLD ROLLED STEEL
   LID MATERIAL:
   KOVAR
   LEAD MATERIAL:
   COPPER CORED #52 ALLOY
3. TOLERANCE:
   (.XX) ±.010
   (.XXX) ±.005